Pressure Switch

▣ Standard Specifications

Fluid	Air
Ambient and fluid temperature (℃)	−5 ~60(23~140°F) (Non−freezing)
Operating pressure range (MPa)	0.1 ~ 0.4(15~60psi)
Proof pressure (MPa)	1.0(140psi)
Max. pressure (MPa)	0.7(100psi)
Hysteresis (MPa)	0.16(24psi)
Scale variation (MPa)	±0.05(7psi)
Repeatability (MPa)	±0.05(7psi)
Contact	1a
Lead wire length	1m(39.75in) standard (grommet type)
Port size R(PT), NPT	1/8″
Weight (kg)	0.042(0.09lb)

▣ Auto-switch specification

Applied model	W8H	
Voltage	DC24V	AC110V
Electric current	5~40mA	5~20mA

▣ How to order

SMS 1000 — R1 — 1 L

Series
(Pressure Switch)

Type of port

R1	R(PT) 1/8 Bracket
N1	NPT 1/8 Bracket
S2	PC2 series Adapter
S3	PC3 series Adapter
S4	PC4 series Adapter
S5	PC5 series Adapter

Lead wire length

Blank	1m(39.37in) (standard)
L	3m(118.11in)
Z	5m(196.85in)

Voltage

1	AC110V
5	DC24V

▣ Construction

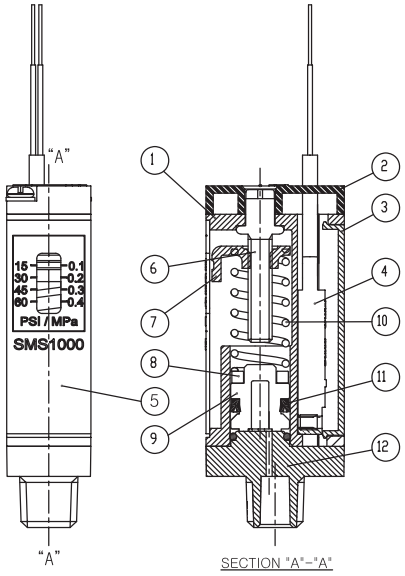

Main Parts / Parts List

No.	Description	Material	Remarks
①	Body	Nylon	
②	Top cover	Resin	
③	Body back cover	Resin	
④	Auto switch ass'y	–	
⑤	Name plate	Resin	
⑥	Adjustment screw	Rolled steel	
⑦	Pointer	Rolled steel	
⑧	Magnet	Rare earth magnet	
⑨	Piston	Polyacetal	
⑩	Spring	SUS304	
⑪	Miniseal Y type	NBR	
⑫	PT fittings	Zinc die cast	

▣ Dimensions

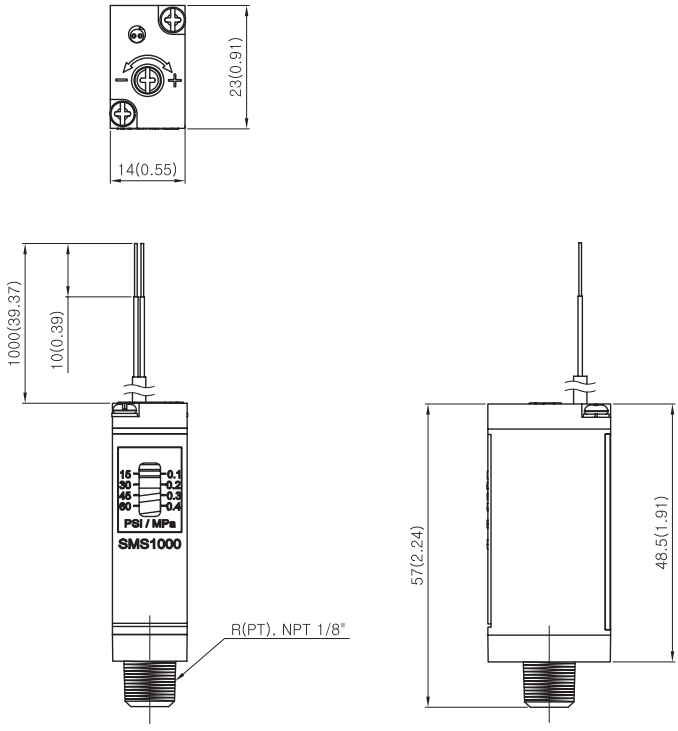

Bracket Type

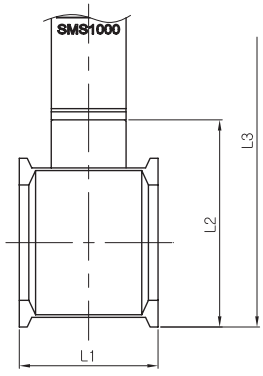

Adapter Type

Series	Dimension of main parts			Remarks
	L1	L2	L3	
PC2 Series	12(0.47)	44.5(1.75)	88(3.46)	
PC3 Series	13(0.51)	51(2.01)	94.5(3.72)	
PC4 Series	26(1.02)	39(1.54)	82(3.23)	
PC5 Series	31(1.22)	57.5(2.26)	101(3.98)	